Power board

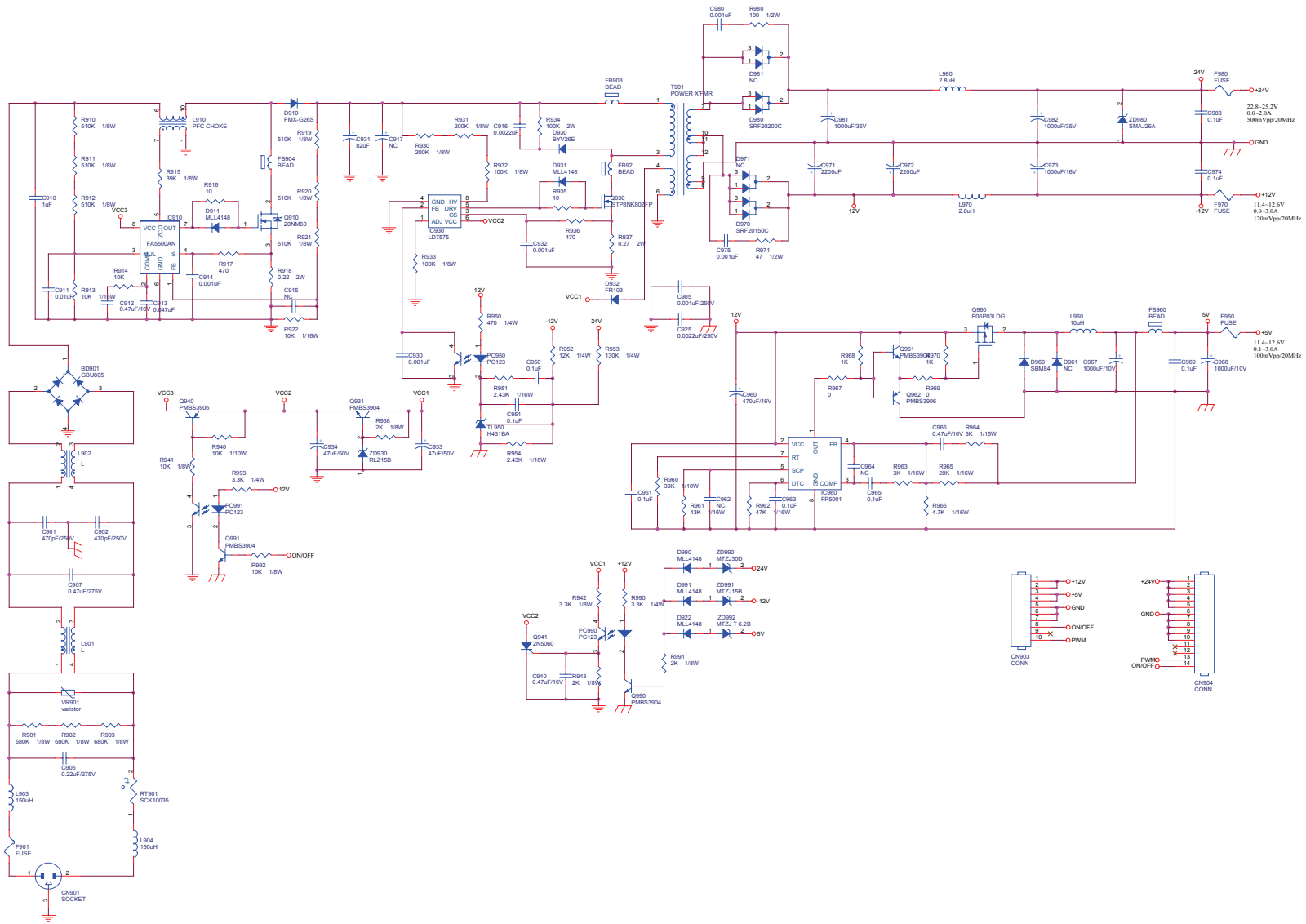

Title	TTE 20"W	
Size	Document Number 715L1599-1	Rev C
Date: Monday, February 27, 2006	Sheet 1 of 1	